smart Linear
SINCE 1998
Sodick

Linear Motor Drive / High-speed & High-precision Die-sinker EDM

AL40G / AL60G

Sodick

create your future

Core Technology

Five Core Technologies Developed In-House For Achieving The World's Highest Quality Machining

Starting with the development of electrical discharge circuits, Sodick has continued to make untiring efforts in the research and development of advanced EDMs. Sodick's philosophy has been the pursuit of the highest level of accuracy, speed and versatility of machining in order to provide the highest quality products to its customers.

Sodick's: Power Supply Units, Discharge Units, Linear Motors, Motion Controllers and Fine Ceramic Components have evolved as its five core technologies. These developments have positioned Sodick at the pinnacle of EDM technologies.

Tech 1&2

NC Power Supply Unit + Discharge Unit

Sodick AL-G sinker EDM series features the latest "SP" power supply unit, which is capable of high-speed, high-precision and high-efficiency machining. The user interface benefits from a 19" colour touch screen for ease of use and operation.

TMM 4 circuit can provide up to 50% more cutting voltage than the conventional machine. The BSN4 circuit is another new feature to improve the quality and speed of finishing cut, by controlling the ON time with nano-seconds.

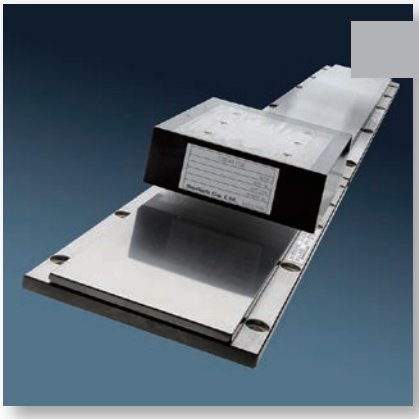

Tech 3

Linear Motor

The most outstanding features of the Sodick in-house developed and manufactured Linear Motors are high-speed axis motion and quick response, which result from wear-free motion and without the need for old-fashioned ball screws. Conventional drive systems use ball screws to convert the rotational motion of the motor into the linear motion of the axis stroke, leading to the unavoidable deterioration in response of high speed servo motors due to back-lash and mechanical lost motion. However linear motors directly provide motion to each axis without converting rotational movements of motor to linear motion.

Tech 4

Motion Controller

The latest Sodick Motion Controller "K-SMC" is adopted on AL-G series, which features even shorter response time of 0.4 to 1 micro-second. The Motion Controller is developed in the U.S.A by Sodick's own R&D division, located in the Silicon Valley specifically to meet and surpass the demanding requirements of the EDM Process for today and the future. It is integrated into the machine's generator and controls the axes motion and monitors the changes in the spark gap.

Absolute Linear Scales

With the introduction of new advanced absolute linear glass scales the need for referencing has been removed. Therefore, ensuring total positional control at all times and reduced setting up time.

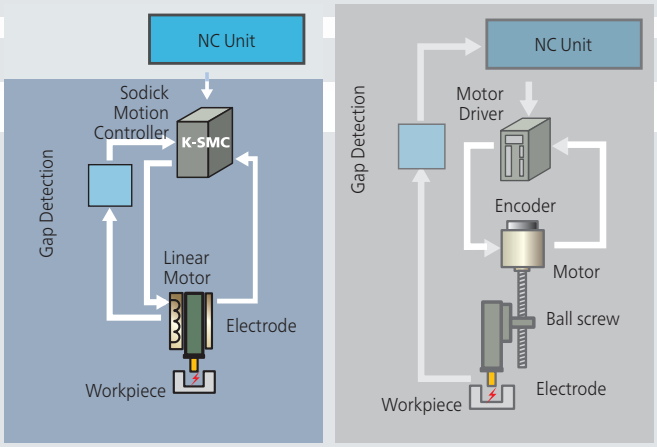

Linear Motor Drive

Conventional Ball Screw

Tech 5

Ceramic Components

In major components, such as quill and table, the Sodick Die Sinker EDM series is equipped with in-house made ceramic material, which has been carefully researched and is considered as the best material for use in high-end EDM machines.

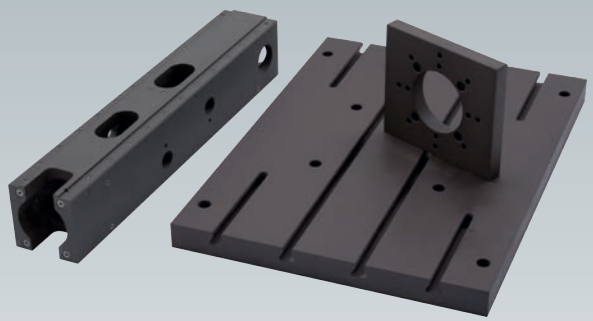

Advantages Of Ceramic Material

1) When it is used in moving components, such as the quill, the low density is effective in weight reduction, leading to increased dynamic response, resulting in superior machined surface quality.
2) The low co-efficient of linear thermal expansion minimises the thermal deformation caused by changing temperature during the cutting process ensuring high accuracy.
3) The excellent electrical insulation enables even very low discharge energy used during finishing to be effectively conducted between electrode and workpiece.
4) Stability of the ceramic material is unaffected by time.

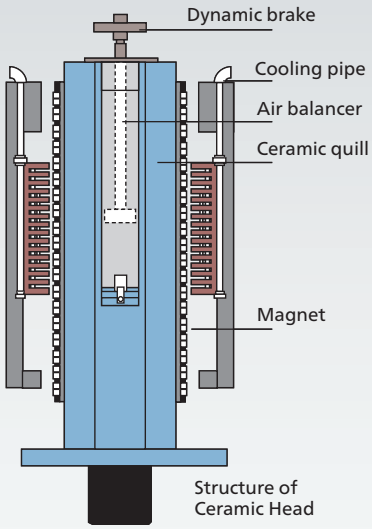

Ceramic Quill

The ceramic quill developed by Sodick featuring lightweight, high rigidity and no thermal deformation is driven on both sides by linear motors in a symmetrical manner (Sodick patent) and enables extremely accurate and smooth motion without causing deviation or distortion of the slideways.

Advanced Machine Design

High Rigidity Structure

The machine cast construction is designed with heavily ribbed sections to provide superior long-term rigidity and stability. The surfaces to which the THK SSR Type Ball-Type Linear Guideways, are mounted on scraped by hand surfaces to ensure a perfectly flat surface and outstanding machine geometry.

Furthermore, the machine has in-machine air & dielectric circulation system to maintain the internal and external temperature of casting.

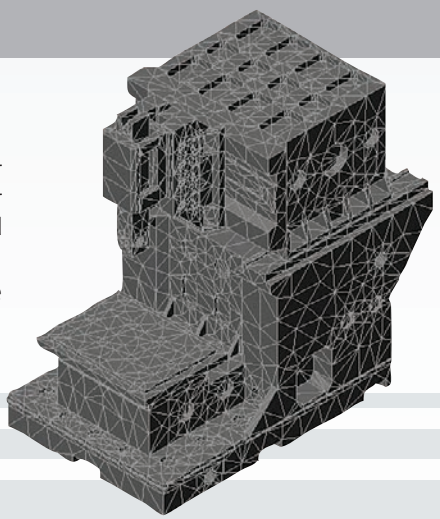

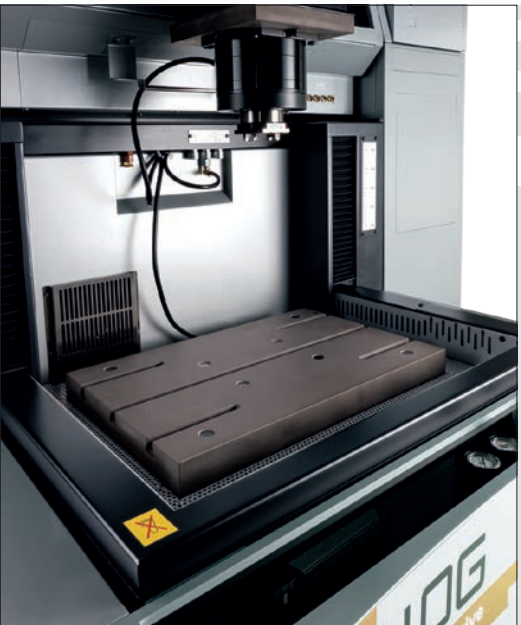

Working Area

AL-G range is designed for even easier access and user-friendly operation. It employs automatic three-sided rise and fall tank and NC operation panel, flushing level/pressure adjustment knobs and remote-controller are positioned at front of the machine, which makes possible an even larger open space at the work-tank.

Thanks to the wide-open side, it is easy to install a Robot beside the machine and organize an automation system. A further benefit of the new ergonomic design, is that a Robot can be positioned either side of the machine as standard.

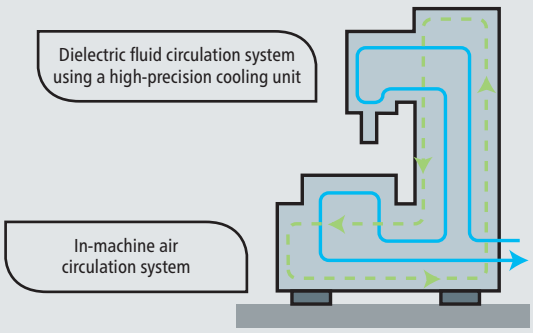

Specifications

Machine			AL40G	AL60G
Work Table Size (W x D)			600 x 400 mm (Ceramic)	750 x 550 mm (Ceramic)
Work Tank Inner Dimensions (W x D x H)			750 x 620 x 350mm	950 x 740 x 450mm
Work Tank Fluid Level (Min to Max)			100 to 300 mm	150 to 400 mm
Work Tank Capacity			190 Liters	330 Liters
X Axis Travel			400 mm	600 mm
Y Axis Travel			300 mm	420 mm
Z Axis Travel			270 mm	370 mm
Distance from clamp chuck to table top	Automatic	EROWA COMBI EROWA ITS	150 to 420 mm	200 to 570 mm
		3R COMBI 3R MACRO	133 to 403 mm	183 to 553 mm
	Manual		150 to 420 mm	200 to 570 mm
Max Weight of Electrode			50 kg	50 kg
Max Workpiece Weight			550 kg	1,500 kg
Distance from Floor to Table Top			830 mm	850 mm
Machine Tool Dimensions (W x D x H)			1,675 x 2,600 x 2,330 (Includes a Power Supply and Dielectric Tank)	1,875 x 2,930 x 2,570 (Includes a Power Supply and Dielectric Tank)
Machine Tool Weight			4,100 kg (Includes a Power Supply and Dielectric Tank)	5,350 kg (Includes a Power Supply and Dielectric Tank)
Air Pressure			0.65 MPa	0.65 MPa
Air Flow			100NL/min	100NL/min
Total Power Input			3-phase, 50/60 Hz, 10 kVA	3-phase, 50/60 Hz, 10 kVA

Dielectric tank	AL40G	AL60G
Dielectric Fluid	Oil	Oil
Dielectric Tank Capacity	285 Liters	465 Liters
Required Amount	330 Liters	560 Liters
Filtration	Replaceable Paper Filters	Replaceable Paper Filters

Specifications are subject to change without prior notice due to continual research and development.
The dielectric chillers on Sodick machines contain either fluorinated greenhouse gas R410A or R407C.

AL40G

Front View

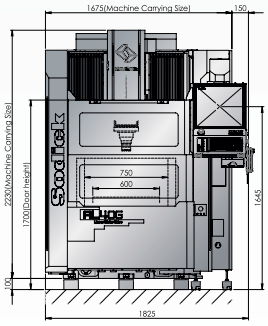

Side View

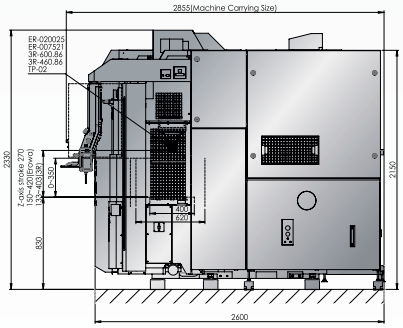

AL60G

Front View

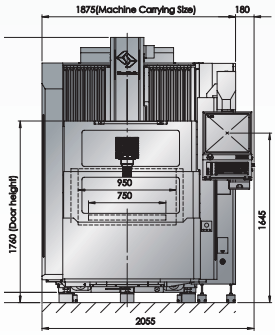

Side View

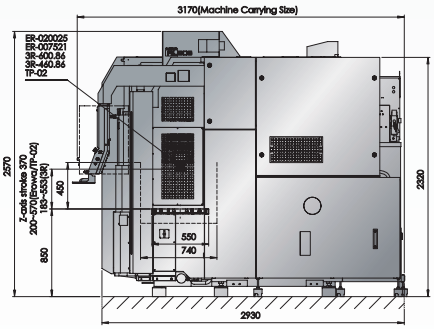

All CE spec machines have external transformer with dimension of ca. 650 x 460 x 540 mm

Sodick

create your future

Sodick Europe Ltd.

Agincourt Road
Warwick, CV34 6XZ
United Kingdom

Sodick Contact

Phone +44 (0) 19 2669 8888
email europe@sodick.eu.com
online www.sodick.org